Multi Channel Conversion Module

SMP Male Solderless Edge Launch Connector 1x2 SB

P/N: 024-SA1-102-SBH

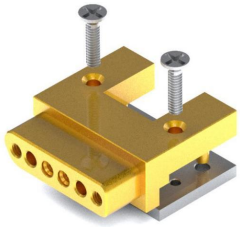

Technical data

Electrical data		
Impedance	50 Ω	
Dielectric withstanding voltage (AC)	500 Vrms	
Insulation resistance	≥ 5000 MΩ	
Frequency range	40GHz	
VSWR	1.6	
Mechanical data		
Durability (mating)	≥ 500 Min	
Size	Length:31.22mm Width:11.94mm Hight:33.55mm	
Weight	25.9g	
Environmental data		
Temperature range	−40 to +120 °C	
Material data		
Connector parts	Material	Plating
Body	Brass	Gold
Center contacts	Beryllium	Gold
Insulator	PTFE	
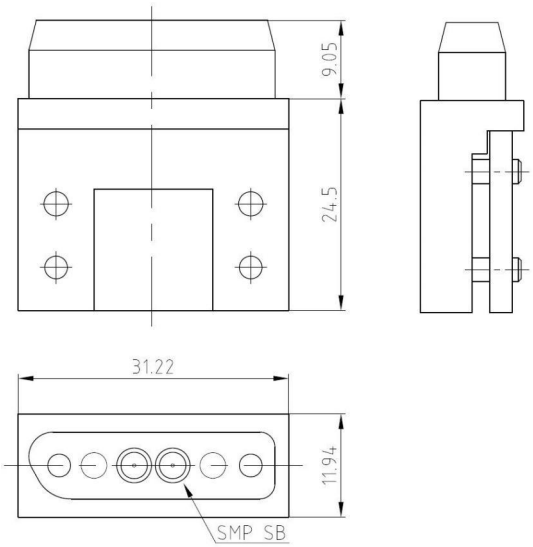
Mechanical Outline