P/N: 134030087

Technical data

Electrical data		
Impedance	50 Ω	
Frequency range	170GHz~250GHz@Typical，261GHz@Max	
Power Handing	2W CW@Max	
Insert Loss	-----@Typical，---@Max	
Return Loss	-10dB	
Product data		
Part Number	134030087	
Waveguide Port	WR-04 Waveguide UG-387/U-M Flange	
Coaxial Port	0.5mm Male Coaxial Connector	
Environmental data		
Temperature range	−40 to +85 °C	
Specification Temperature	25°C	
Material data		
Waveguide port parts	Material	Plating
Body	Copper	Gold
Coaxial port parts	Material	Plating
Body	Stainless	Passivation
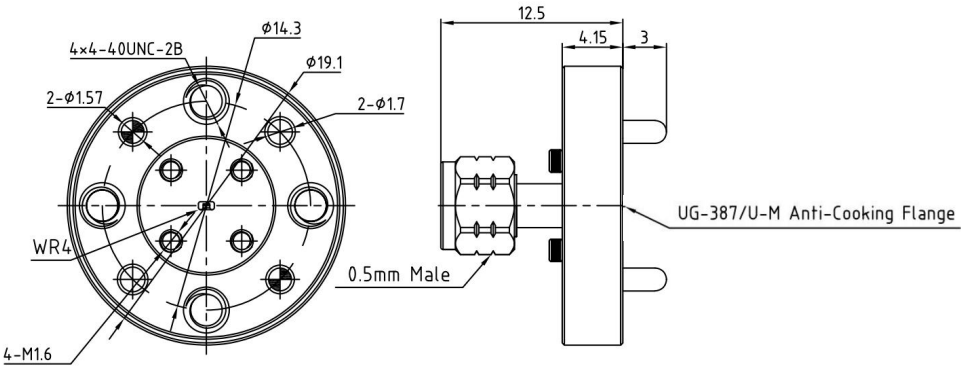
Mechanical Outline